# DLD Logisim Assignments

**1. Design of Flip-Flops:**

a) Design an **SR Flip-Flop** using basic logic gates.

**Sol$^n$:-**

Logic Diagram of **SR Flip-Flop**:

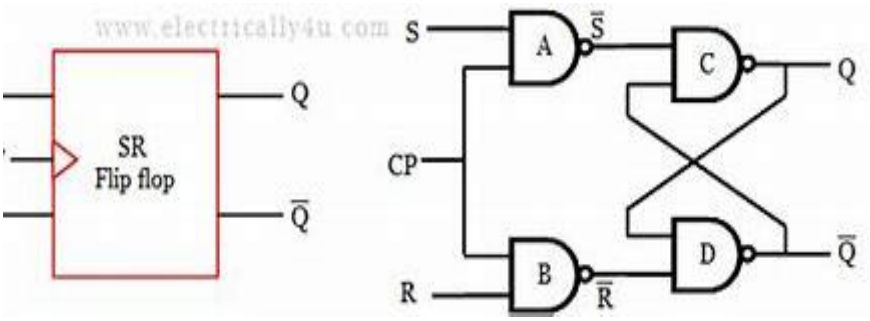


Truth Table for **SR Flip-Flop**:

| S | R | Qn | Qn+1 |
|---|---|---|---|
| 0 | 0 | 0 | 0 |
| 0 | 0 | 1 | 1 |
| 0 | 1 | 0 | 0 |
| 0 | 1 | 1 | 0 |
| 1 | 0 | 0 | 1 |
| 1 | 0 | 1 | 1 |
| 1 | 1 | 0 | Invalid |
| 1 | 1 | 1 | Invalid |

K-Map for $\mathbf{Q_{n+1}}$ :

| S \ RQn | 00 | 01 | 11 | 10 |
|---|---|---|---|---|
| 0 | | 1 | | |
| 1 | 1 | 1 | X | X |

$\mathbf{Q_{n+1} = S + Q_nR'}$

b) Design a **JK Flip-Flop** using basic logic gates.

**Sol$^n$:-**

Logic Diagram of **JK Flip-Flop**:

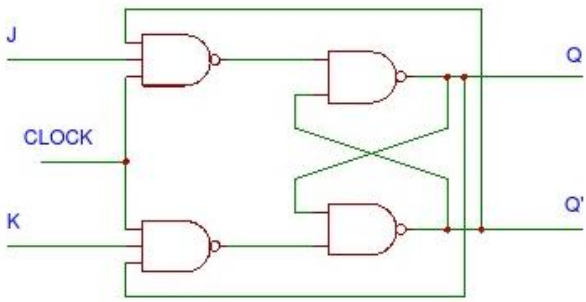


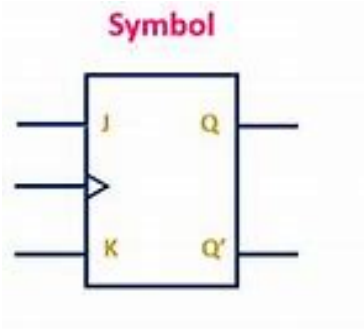


Truth Table of **JK Flip-Flop**:

| INPUT | | | OUTPUT |
|---|---|---|---|
| J | K | Qn | Q(n+1) |
| 0 | 0 | 0 | 0 |
| 0 | 0 | 1 | 1 |
| 0 | 1 | 0 | 0 |
| 0 | 1 | 1 | 0 |
| 1 | 0 | 0 | 1 |
| 1 | 0 | 1 | 1 |
| 1 | 1 | 0 | 1 |
| 1 | 1 | 1 | 0 |

K-Map for $\mathbf{Q_{n+1}}$ :

| J \ KQn | $\bar{K}\bar{Q}n$ | $\bar{K}Qn$ | $KQn$ | $K\bar{Q}n$ |
|---|---|---|---|---|
| $\bar{J}$ | 0 | 1 | 0 | 0 |
| J | 1 | 1 | 0 | 1 |

$$Q_{n+1} = K'Q_n + JQ_n'$$

c) Design a **T Flip-Flop** using basic logic gates.

**Sol$^n$:-**

Logic Diagram of **T Flip-Flop**:

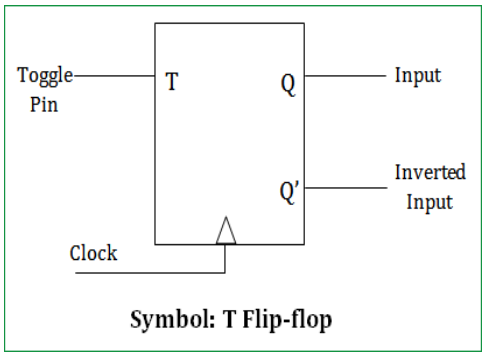


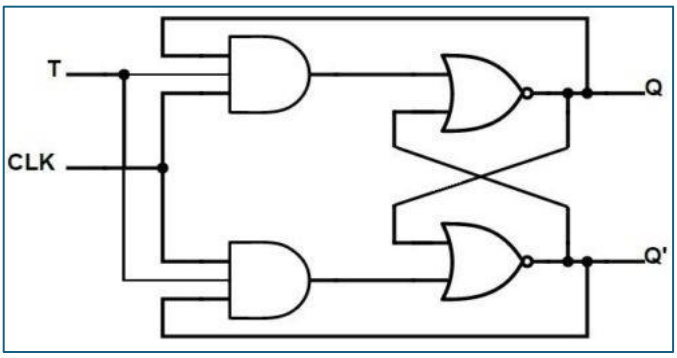


Truth Table for **T Flip-Flop**:

| T | Q | Q(t+1) |
|---|---|---|
| 0 | 0 | 0 |
| 1 | 0 | 1 |
| 0 | 1 | 1 |
| 1 | 1 | 0 |

K-Map for $Q_{n+1}$ :

| T \ Qn | | Qn' 0 | Qn 1 |
|---|---|---|---|
| T' | 0 | | 1 |
| T | 1 | 1 | |

$Q_{n+1} = TQ_n' + T'Q_n$

d) Design a **D Flip-Flop** using basic logic gates.

**Sol$^n$:-**

Logic Diagram of **D Flip-Flop**:

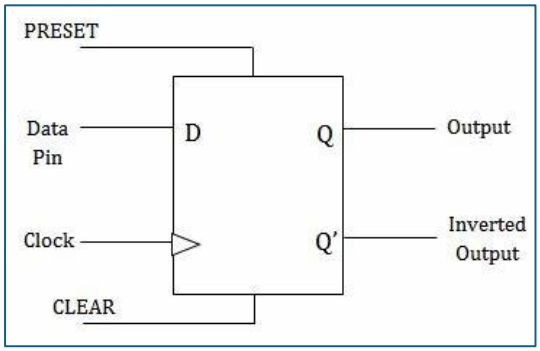


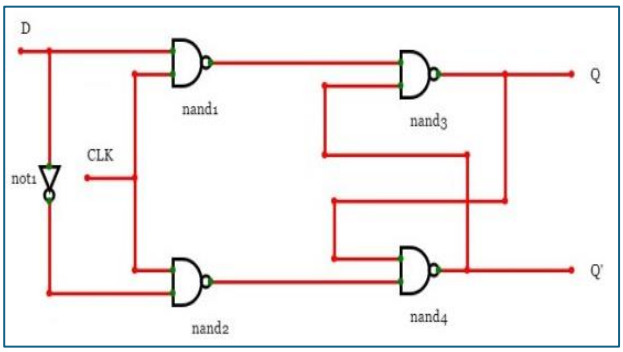


Truth Table for **D Flip-Flop**:

| Q(n) | D(n) | Q(n+1) (Next) |
|---|---|---|
| 0 | 0 | 0 |
| 0 | 1 | 1 |
| 1 | 0 | 0 |
| 1 | 1 | 1 |

K-Map for $\mathbf{Q_{n+1}}$ :

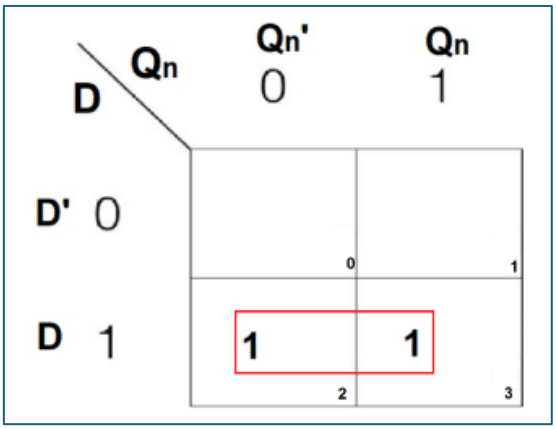


$\mathbf{Q_{n+1} = D}$

**2. Full Adder Using a 3:8 Decoder.**

**Sol$^n$:-**

Logic Diagram for implementing **Full Adder** using **3:8 Decoder**:

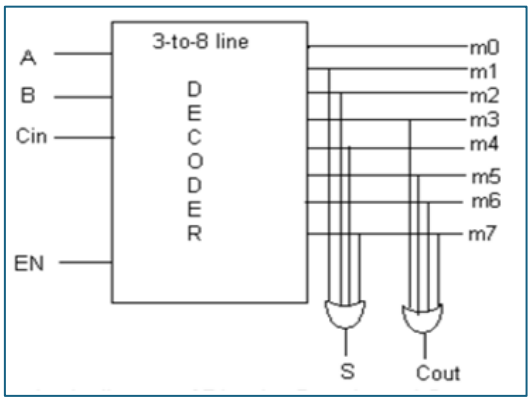


Truth Table for **Full Adder** using **3:8 Decoder**:

| Input bit for number A | Input bit for number B | Carry bit input $C_{IN}$ | Sum bit output S | Carry bit output $C_{OUT}$ |
|---|---|---|---|---|
| 0 | 0 | 0 | 0 | 0 |
| 0 | 0 | 1 | 1 | 0 |
| 0 | 1 | 0 | 1 | 0 |
| 0 | 1 | 1 | 0 | 1 |
| 1 | 0 | 0 | 1 | 0 |
| 1 | 0 | 1 | 0 | 1 |
| 1 | 1 | 0 | 0 | 1 |
| 1 | 1 | 1 | 1 | 1 |

K-Maps for output variables **S** and **$C_{out}$** :

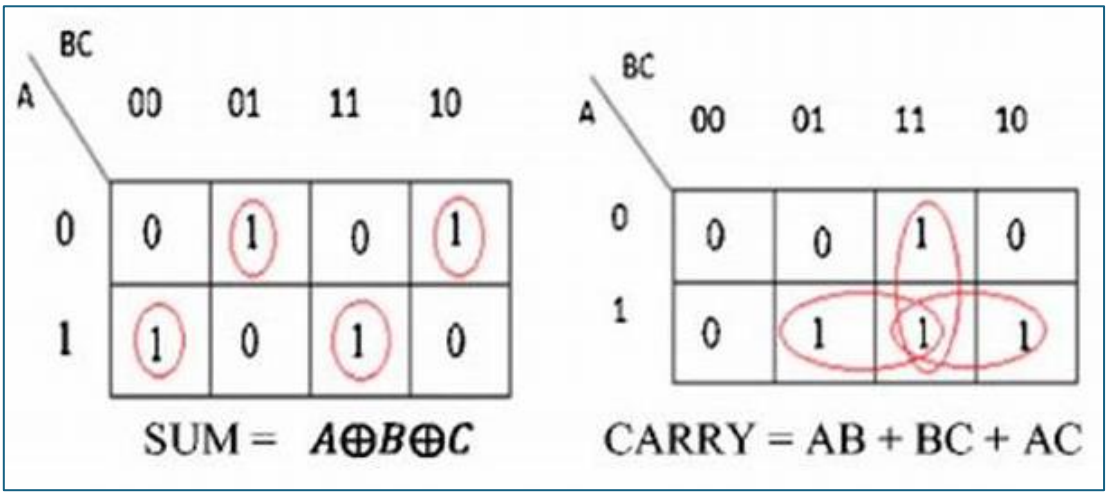

**3. Full Adder Using a Demultiplexer.**

**Sol$^n$:-**

Logic Diagram for implementing **Full Adder** using **1:8 Demultiplexer**:

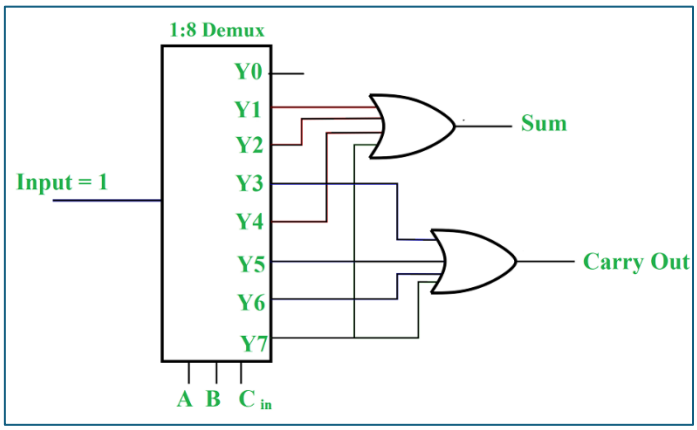


Truth Table for **Full Adder** using **1:8 Demultiplexer**:

| Inputs | | | Outputs | |
|---|---|---|---|---|
| A | B | C – IN | Sum | C - Out |
| 0 | 0 | 0 | 0 | 0 |
| 0 | 0 | 1 | 1 | 0 |
| 0 | 1 | 0 | 1 | 0 |
| 0 | 1 | 1 | 0 | 1 |
| 1 | 0 | 0 | 1 | 0 |
| 1 | 0 | 1 | 0 | 1 |
| 1 | 1 | 0 | 0 | 1 |
| 1 | 1 | 1 | 1 | 1 |

K-Maps for output variables **S** and **$C_{out}$** :

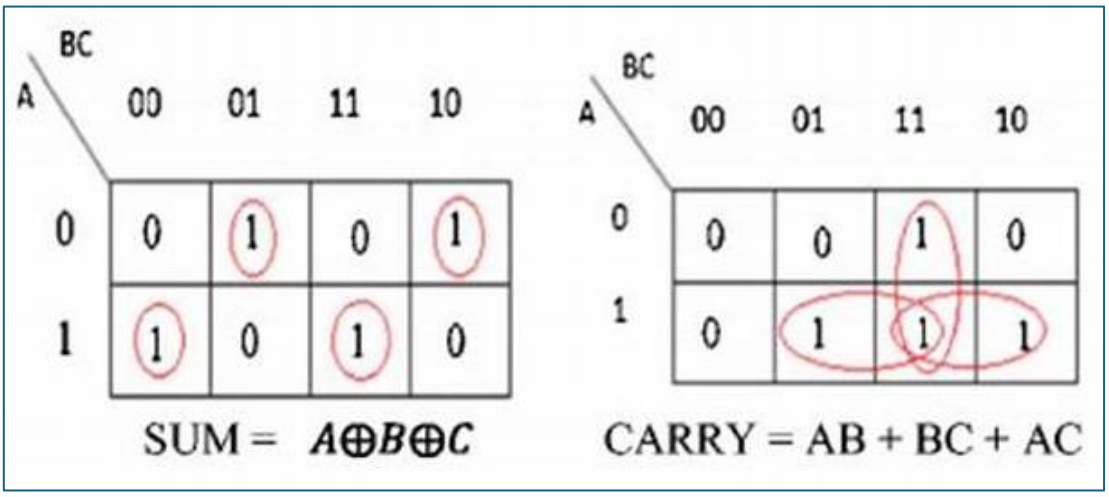

**4. 8-Bit Magnitude Comparator Using a 4-Bit Comparator.**

**<u>Sol$^n$ :-</u>**

Comparator circuit to compare two bits **A** and **B**:

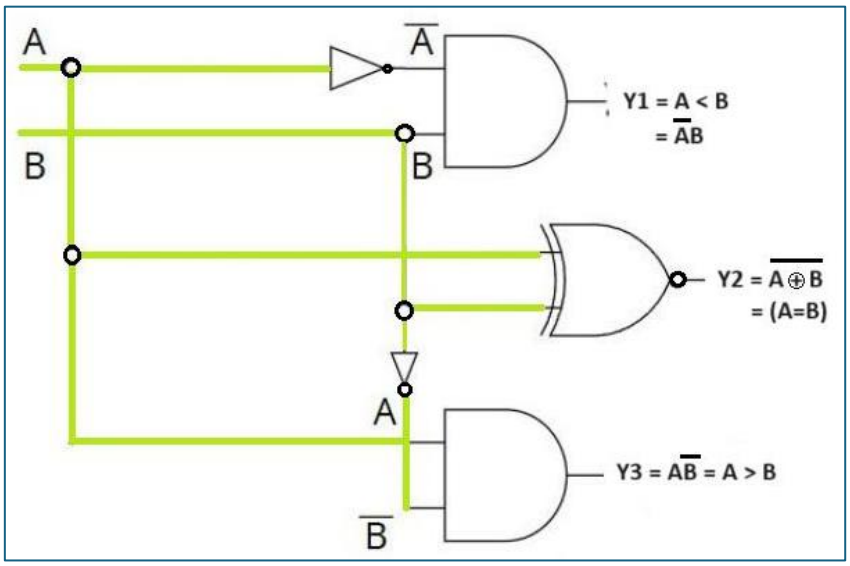


Implementing **8-bit Comparator** using two cascaded **4-bit Comparators**:

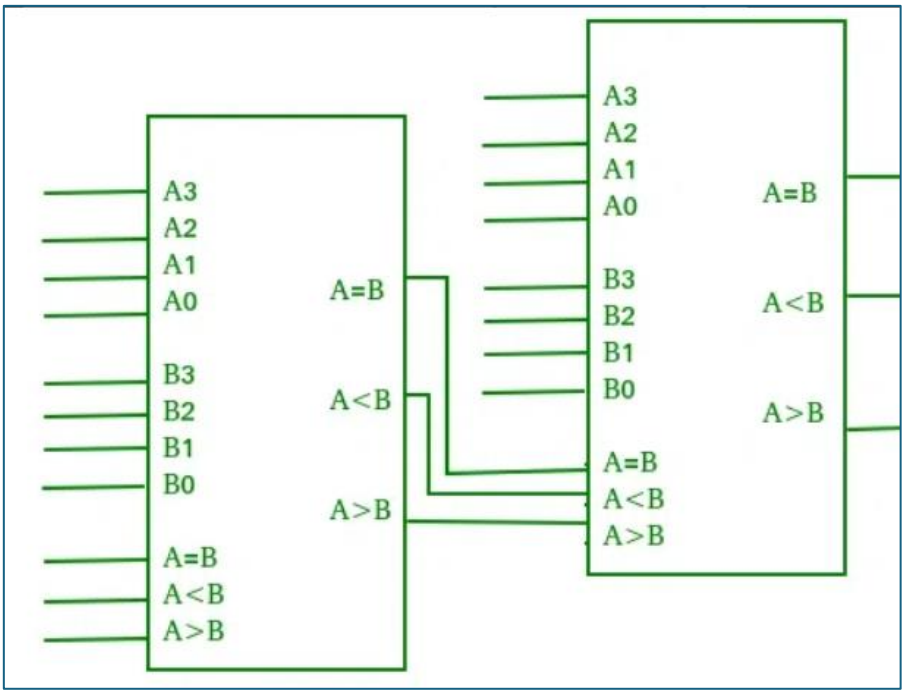


**<u>Fig: 8-bit Comparator using cascaded 4-bit Comparators</u>**

**5. Parity Generator and Checker**

**<u>Sol$^n$ :-</u>**

Logic Diagram for **Parity Generator** and **Checker**:

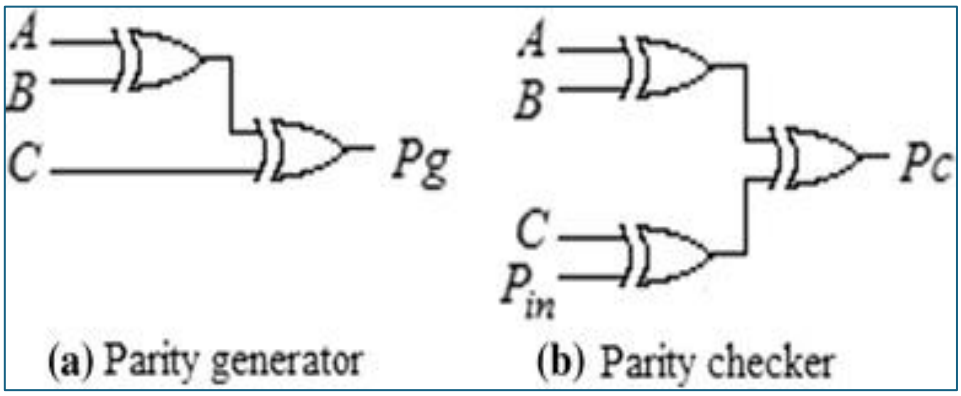


Truth Table for **Parity Generator** and **Checker**:

| 3-bit Message | | | Odd Parity Bit | Even Parity Bit |
|---|---|---|---|---|
| X | Y | Z | | |
| 0 | 0 | 0 | 1 | 0 |
| 0 | 0 | 1 | 0 | 1 |
| 0 | 1 | 0 | 0 | 1 |
| 0 | 1 | 1 | 1 | 0 |
| 1 | 0 | 0 | 0 | 1 |
| 1 | 0 | 1 | 1 | 0 |
| 1 | 1 | 0 | 1 | 0 |
| 1 | 1 | 1 | 0 | 1 |

**Fig 1: Parity Generator Truth Table**

| Decimal Equivalent | Four Bits Received | | | | Parity Error |
|---|---|---|---|---|---|
| | P | A | B | C | PEC |
| 0 | 0 | 0 | 0 | 0 | 0 |
| 1 | 0 | 0 | 0 | 1 | 1 |
| 2 | 0 | 0 | 1 | 0 | 1 |
| 3 | 0 | 0 | 1 | 1 | 0 |
| 4 | 0 | 1 | 0 | 0 | 1 |
| 5 | 0 | 1 | 0 | 1 | 0 |
| 6 | 0 | 1 | 1 | 0 | 0 |
| 7 | 0 | 1 | 1 | 1 | 1 |
| 8 | 1 | 0 | 0 | 0 | 1 |
| 9 | 1 | 0 | 0 | 1 | 0 |
| 10 | 1 | 0 | 1 | 0 | 0 |
| 11 | 1 | 0 | 1 | 1 | 1 |
| 12 | 1 | 1 | 0 | 0 | 0 |
| 13 | 1 | 1 | 0 | 1 | 1 |
| 14 | 1 | 1 | 1 | 0 | 1 |
| 15 | 1 | 1 | 1 | 1 | 0 |

**Fig 2: Even Parity Checker Truth Table**

**6. Priority Encoder (8x3) Using Basic Gates.**

**<u>Sol$^n$ :-</u>**

Logic Diagram of **8:3 Priority Encoder**:

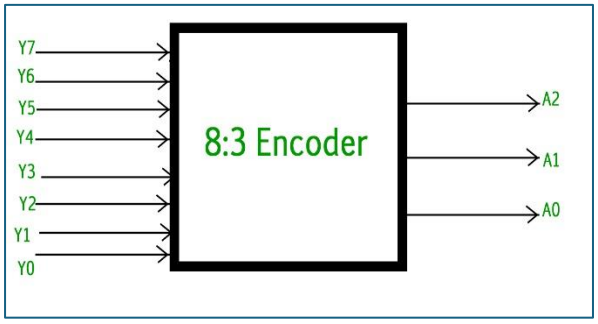


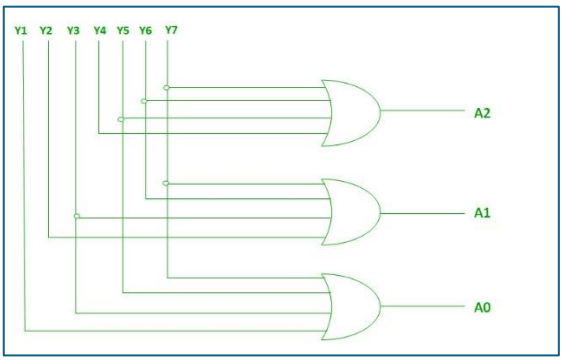


Logical Expressions for **A0**, **A1** and **A2**:

1. **A2 = Y7 + Y6 + Y5 + Y4**
2. **A1 = Y7 + Y6 + Y3 + Y2**
3. **A0 = Y7 + Y5 + Y3 + Y1**

Truth Table for **8:3 Priority Encoder**:

| INPUTS | | | | | | | | OUTPUTS | | |
|---|---|---|---|---|---|---|---|---|---|---|
| Y7 | Y6 | Y5 | Y4 | Y3 | Y2 | Y1 | Y0 | A2 | A1 | A0 |
| 0 | 0 | 0 | 0 | 0 | 0 | 0 | 1 | 0 | 0 | 0 |
| 0 | 0 | 0 | 0 | 0 | 0 | 1 | 0 | 0 | 0 | 1 |
| 0 | 0 | 0 | 0 | 0 | 1 | 0 | 0 | 0 | 1 | 0 |
| 0 | 0 | 0 | 0 | 1 | 0 | 0 | 0 | 0 | 1 | 1 |
| 0 | 0 | 0 | 1 | 0 | 0 | 0 | 0 | 1 | 0 | 0 |
| 0 | 0 | 1 | 0 | 0 | 0 | 0 | 0 | 1 | 0 | 1 |
| 0 | 1 | 0 | 0 | 0 | 0 | 0 | 0 | 1 | 1 | 0 |
| 1 | 0 | 0 | 0 | 0 | 0 | 0 | 0 | 1 | 1 | 1 |

**7. Binary-to-Hexadecimal and Binary-to-Octal Decoders.**

**<u>Sol$^n$ :-</u>**

**Binary-to-Octal Decoder:**

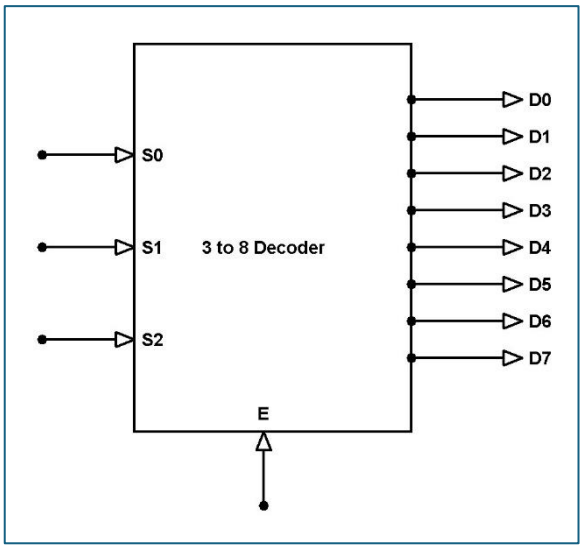


**Binary-to-Hexadecimal Decoder:**

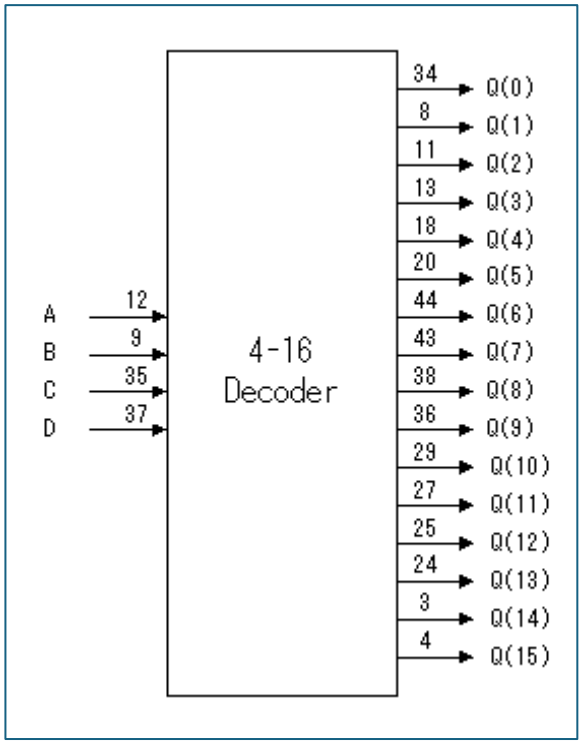

**8. 4-Bit Asynchronous Up/Down Counter.**

**<u>Sol$^n$ :-</u>**

**4-bit Asynchronous Counter** with corresponding **Timing Diagram**:

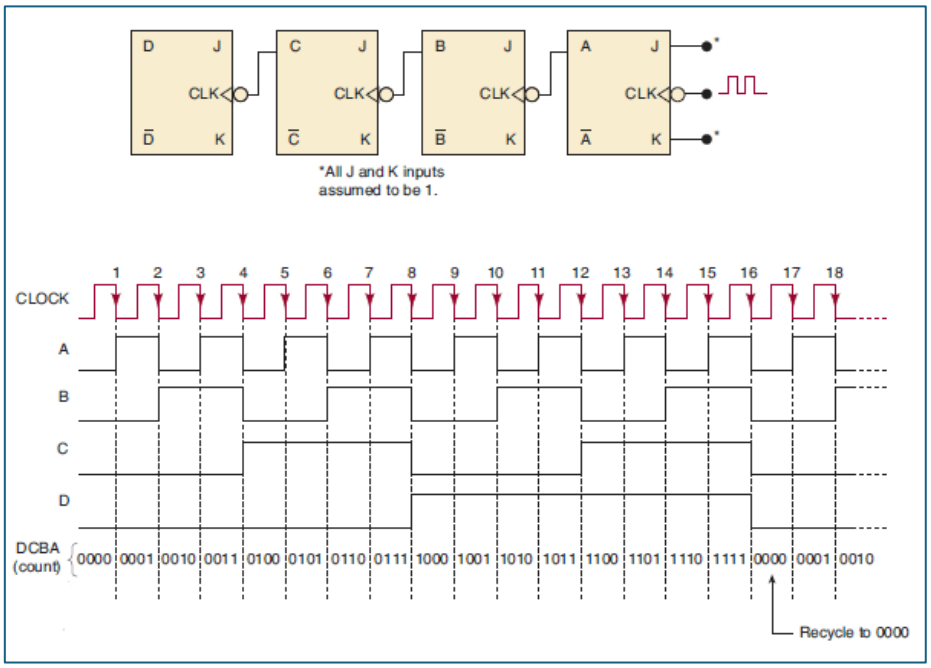


Truth Table for **4-bit Asynchronous Counters:**

| CK | $Q_3$ | $Q_2$ | $Q_1$ | $Q_0$ | $\overline{Q_3}$ | $\overline{Q_2}$ | $\overline{Q_1}$ | $\overline{Q_0}$ |
|---|---|---|---|---|---|---|---|---|
| 0 | 0 | 0 | 0 | 0 | 1 | 1 | 1 | 1 |
| 1 | 0 | 0 | 0 | 1 | 1 | 1 | 1 | 0 |
| 2 | 0 | 0 | 1 | 0 | 1 | 1 | 0 | 1 |
| 3 | 0 | 0 | 1 | 1 | 1 | 1 | 0 | 0 |
| 4 | 0 | 1 | 0 | 0 | 1 | 0 | 1 | 1 |
| 5 | 0 | 1 | 0 | 1 | 1 | 0 | 1 | 0 |
| 6 | 0 | 1 | 1 | 0 | 1 | 0 | 0 | 1 |
| 7 | 0 | 1 | 1 | 1 | 1 | 0 | 0 | 0 |
| 8 | 1 | 0 | 0 | 0 | 0 | 1 | 1 | 1 |
| 9 | 1 | 0 | 0 | 1 | 0 | 1 | 1 | 0 |
| 10 | 1 | 0 | 1 | 0 | 0 | 1 | 0 | 1 |
| 11 | 1 | 0 | 1 | 1 | 0 | 1 | 0 | 0 |
| 12 | 1 | 1 | 0 | 0 | 0 | 0 | 1 | 1 |
| 13 | 1 | 1 | 0 | 1 | 0 | 0 | 1 | 0 |
| 14 | 1 | 1 | 1 | 0 | 0 | 0 | 0 | 1 |
| 15 | 1 | 1 | 1 | 1 | 0 | 0 | 0 | 0 |

## 9. 4-Bit Synchronous Up/Down Counter.

**Sol$^n$ :-**

**4-bit Synchronous Counter** with **Timing Diagram**:

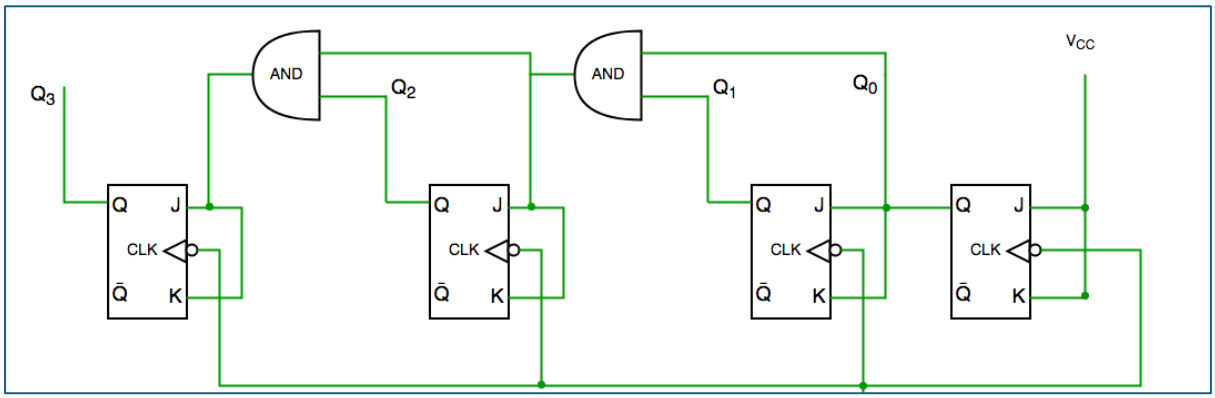


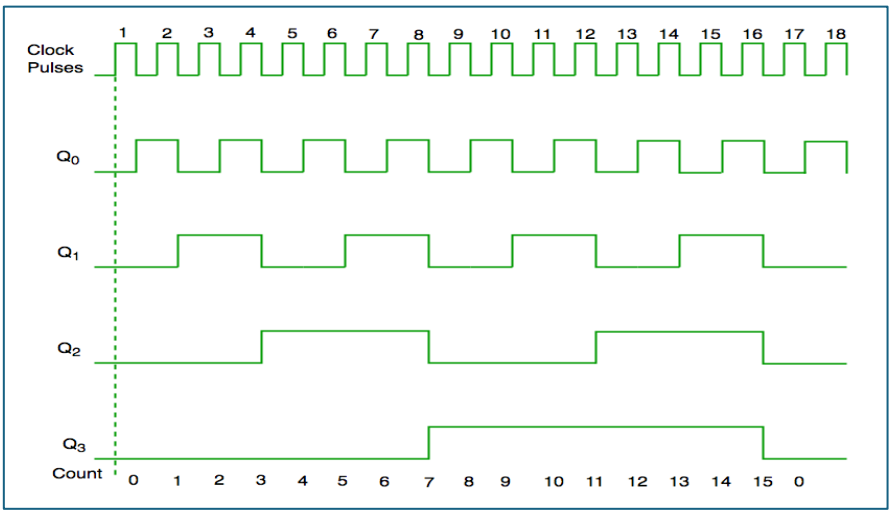


Truth Table for **4-bit Synchronous Counters:**

| CK | $Q_3$ | $Q_2$ | $Q_1$ | $Q_0$ | $\overline{Q_3}$ | $\overline{Q_2}$ | $\overline{Q_1}$ | $\overline{Q_0}$ |
|---|---|---|---|---|---|---|---|---|
| 0 | 0 | 0 | 0 | 0 | 1 | 1 | 1 | 1 |
| 1 | 0 | 0 | 0 | 1 | 1 | 1 | 1 | 0 |
| 2 | 0 | 0 | 1 | 0 | 1 | 1 | 0 | 1 |
| 3 | 0 | 0 | 1 | 1 | 1 | 1 | 0 | 0 |
| 4 | 0 | 1 | 0 | 0 | 1 | 0 | 1 | 1 |
| 5 | 0 | 1 | 0 | 1 | 1 | 0 | 1 | 0 |
| 6 | 0 | 1 | 1 | 0 | 1 | 0 | 0 | 1 |
| 7 | 0 | 1 | 1 | 1 | 1 | 0 | 0 | 0 |
| 8 | 1 | 0 | 0 | 0 | 0 | 1 | 1 | 1 |
| 9 | 1 | 0 | 0 | 1 | 0 | 1 | 1 | 0 |
| 10 | 1 | 0 | 1 | 0 | 0 | 1 | 0 | 1 |
| 11 | 1 | 0 | 1 | 1 | 0 | 1 | 0 | 0 |
| 12 | 1 | 1 | 0 | 0 | 0 | 0 | 1 | 1 |
| 13 | 1 | 1 | 0 | 1 | 0 | 0 | 1 | 0 |
| 14 | 1 | 1 | 1 | 0 | 0 | 0 | 0 | 1 |
| 15 | 1 | 1 | 1 | 1 | 0 | 0 | 0 | 0 |

## 10. 4-Bit Synchronous Gray Code Counter.

**Sol$^n$ :-**

Logic Diagram for **Binary** to **Gray Code** Conversion:

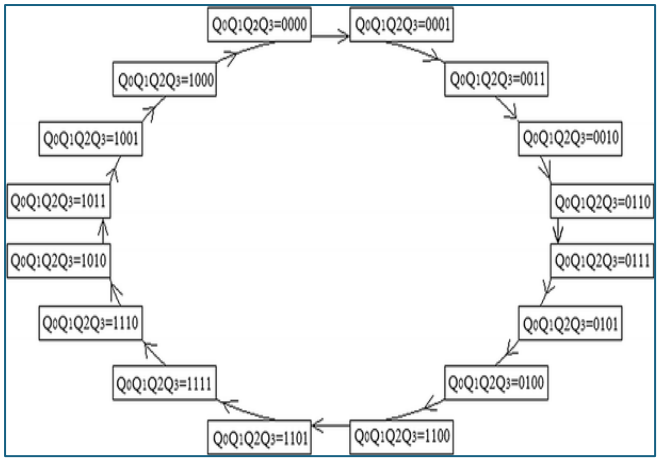


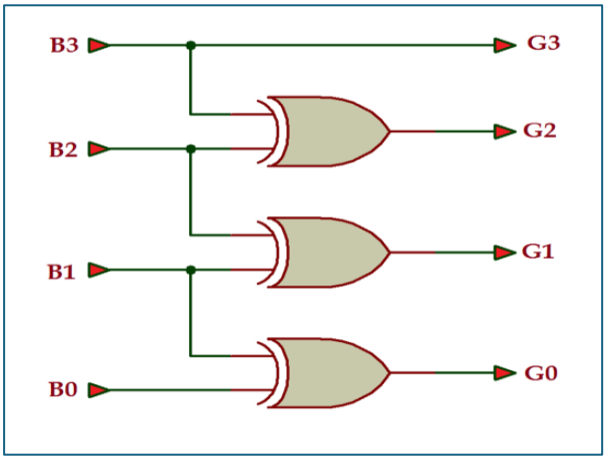


Truth Table for **Binary** to **Gray Code**:

| Gray Code Sequence | | | | JK Inputs | | | |
|---|---|---|---|---|---|---|---|
| G3 | G2 | G1 | G0 | J0 K0 | J1 K1 | J2 K2 | J3 K3 |
| 0 | 0 | 0 | 0 | 1 X | 0 X | 0 X | 0 X |
| 0 | 0 | 0 | 1 | X 0 | 1 X | 0 X | 0 X |
| 0 | 0 | 1 | 1 | X 1 | X 0 | 0 X | 0 X |
| 0 | 0 | 1 | 0 | 0 X | X 0 | 1 X | 0 X |
| 0 | 1 | 1 | 0 | 1 X | X 0 | X 0 | 0 X |
| 0 | 1 | 1 | 1 | X 1 | X 1 | X 0 | 0 X |
| 0 | 1 | 0 | 0 | 0 X | 0 X | X 0 | 0 X |
| 0 | 1 | 0 | 0 | 0 X | 0 X | X 0 | 1 X |
| 1 | 1 | 0 | 0 | 1 X | 0 X | X 0 | X 0 |
| 1 | 1 | 0 | 1 | X 0 | 1 X | X 0 | X 0 |
| 1 | 1 | 1 | 1 | 1 X | X 0 | X 0 | X 0 |
| 1 | 1 | 1 | 0 | 0 X | X 0 | X 1 | X 0 |
| 1 | 0 | 1 | 0 | 1 X | X 0 | 0 X | X 0 |
| 1 | 0 | 1 | 1 | X 0 | 1 X | 0 X | X 0 |
| 1 | 0 | 0 | 1 | 1 X | 0 X | 0 X | X 0 |
| 1 | 0 | 0 | 0 | 0 X | 0 X | 0 X | X 1 |

**11. Synchronous Counter for the Sequence 1, 3, 5, 7, 1, 3...**

**<u>Sol$^n$ :</u>**

State Diagram for the **Sequence Counter**:

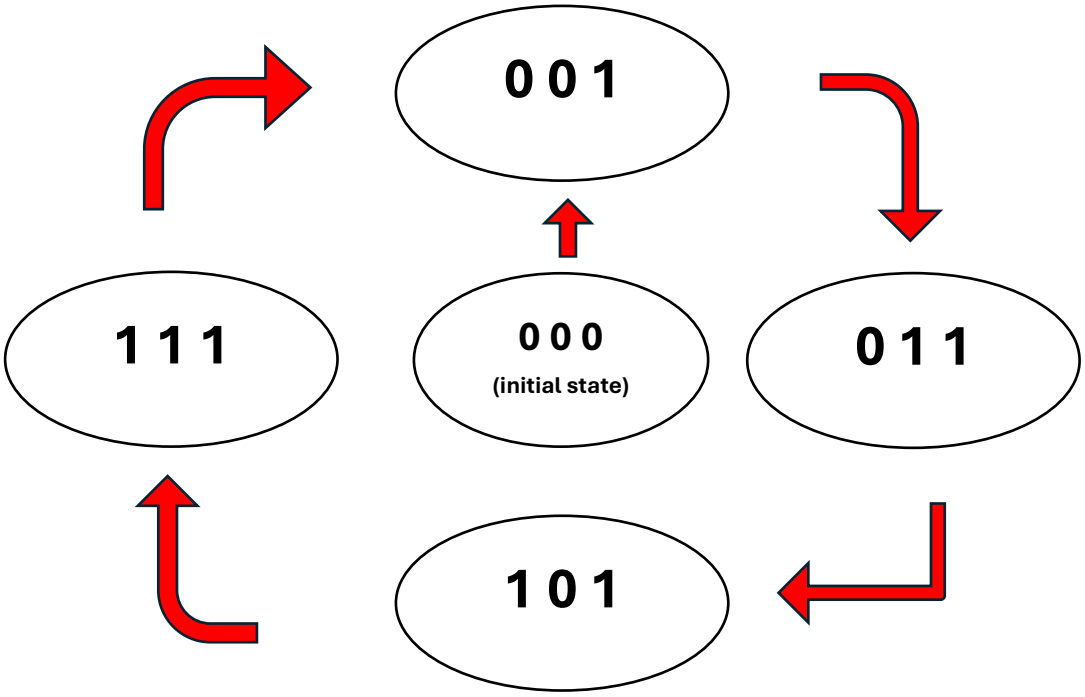


State Table for the **Sequence Counter** using **JK Flip-Flops**:

(Considering 000 to be the initial state, and the next entry being the next state of the counter.)

| Given Binary Sequence | | | JK Inputs | | |
|---|---|---|---|---|---|
| G2 | G1 | G0 | J0 K0 | J1 K1 | J2 K2 |
| 0 | 0 | 0 | 1 X | 0 X | 0 X |
| 0 | 0 | 1 | X 0 | 1 X | 0 X |
| 0 | 1 | 1 | X 0 | X 1 | 1 X |
| 1 | 0 | 1 | X 0 | 1 X | X 0 |
| 1 | 1 | 1 | X 0 | X 1 | X 1 |
| 0 | 0 | 1 | X 0 | 1 X | 0 X |

From the above State Table, we determine the inputs **J0, K0, J1, K1, J2** and **K2** with the help of K-Maps.

**12. Sequence Generator for 1101101...**

**<u>Sol$^n$ :</u>**

Count of **0**'s: 2, Count of **1**'s: 5 ; Max of (2,5): 5

$2^{n-1}$ >= 5 => n=4, i.e. No. of **Counters** = 4

State Table for the **Sequence Generator**:

| Count of 0's and 1s<br>Q3Q2Q1 | Output<br>(Q0) | Input Combinations | | | |
|---|---|---|---|---|---|
| | | J0K0 | J1K1 | J2K2 | J3K3 |
| 000 | 1 | X 0 | 1 X | 0 X | 0 X |
| 001 | 1 | X 1 | X 1 | 0 X | 0 X |
| 000 | 0 | 1 X | 0 X | 1 X | 0 X |
| 010 | 1 | X 0 | 1 X | X 0 | 0 X |
| 011 | 1 | 1 X | X 0 | X 1 | 0 X |
| 001 | 0 | 1 X | X 1 | 0 X | 0 X |
| 100 | 1 | X 0 | 0 X | 0 X | X 1 |

State Diagram for the count sequence:

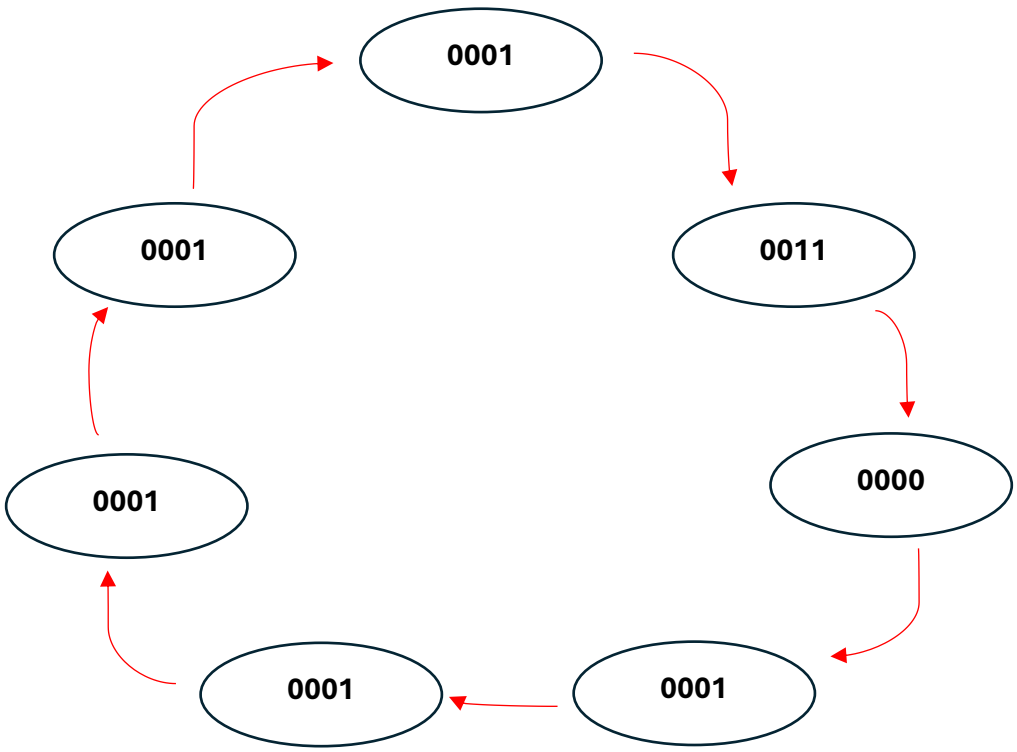


We use the state table to create k-maps for the input combinations **J0**, **K0**, **J1**, **K1**, **J2**, **K2**, **J3** and **K3.**

**13. 3-Bit Up/Down Counter with 7-Segment Display.**

**<u>Sol$^n$ :</u>**

We use the following chart to prepare a **Binary** to **7-segment LED** converter

| A | B | C | D | E | F | G | Display |
|---|---|---|---|---|---|---|---|
| 1 | 1 | 1 | 1 | 1 | 1 | 0 | 0 |
| 0 | 1 | 1 | 0 | 0 | 0 | 0 | 1 |
| 1 | 1 | 0 | 1 | 1 | 0 | 1 | 2 |
| 1 | 1 | 1 | 1 | 0 | 0 | 1 | 3 |
| 0 | 1 | 1 | 0 | 0 | 1 | 1 | 4 |
| 1 | 0 | 1 | 1 | 0 | 1 | 1 | 5 |
| 1 | 0 | 1 | 1 | 1 | 1 | 1 | 6 |
| 1 | 1 | 1 | 0 | 0 | 0 | 0 | 7 |
| 1 | 1 | 1 | 1 | 1 | 1 | 1 | 8 |
| 1 | 1 | 1 | 1 | 0 | 1 | 1 | 9 |

Logic Diagram for the **UP/DOWN Counter**:

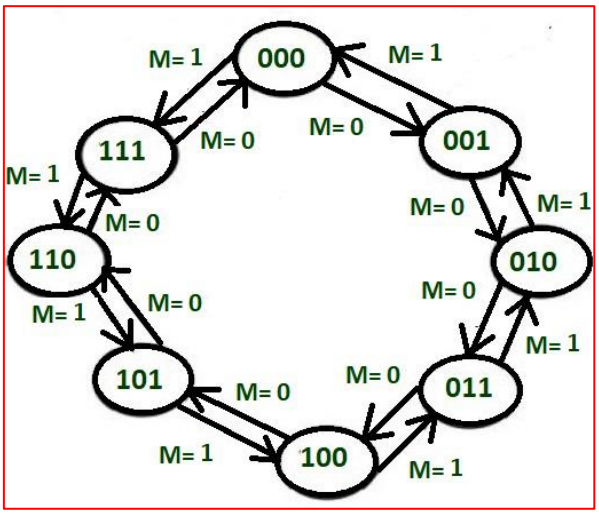


State Table for inputs **T0**, **T1** and **T2**:

| M | $Q_3$ | $Q_2$ | $Q_1$ | $Q_3^*$ | $Q_2^*$ | $Q_1^*$ | $T_3$ | $T_2$ | $T_1$ |
|---|---|---|---|---|---|---|---|---|---|
| 0 | 0 | 0 | 0 | 0 | 0 | 1 | 0 | 0 | 1 |
| 0 | 0 | 0 | 1 | 0 | 1 | 0 | 0 | 1 | 1 |
| 0 | 0 | 1 | 0 | 0 | 1 | 1 | 0 | 0 | 1 |
| 0 | 0 | 1 | 1 | 1 | 0 | 0 | 1 | 1 | 1 |
| 0 | 1 | 0 | 0 | 1 | 0 | 1 | 0 | 0 | 1 |
| 0 | 1 | 0 | 1 | 1 | 1 | 0 | 0 | 1 | 1 |
| 0 | 1 | 1 | 0 | 1 | 1 | 1 | 0 | 0 | 1 |
| 0 | 1 | 1 | 1 | 0 | 0 | 0 | 1 | 1 | 1 |
| 1 | 0 | 0 | 0 | 1 | 1 | 1 | 1 | 1 | 1 |
| 1 | 0 | 0 | 1 | 0 | 0 | 0 | 0 | 0 | 1 |
| 1 | 0 | 1 | 0 | 0 | 0 | 1 | 0 | 1 | 1 |
| 1 | 0 | 1 | 1 | 0 | 1 | 0 | 0 | 0 | 1 |
| 1 | 1 | 0 | 0 | 0 | 1 | 1 | 1 | 1 | 1 |
| 1 | 1 | 0 | 1 | 1 | 0 | 0 | 0 | 0 | 1 |
| 1 | 1 | 1 | 0 | 1 | 0 | 1 | 0 | 1 | 1 |
| 1 | 1 | 1 | 1 | 0 | 1 | 0 | 0 | 0 | 1 |
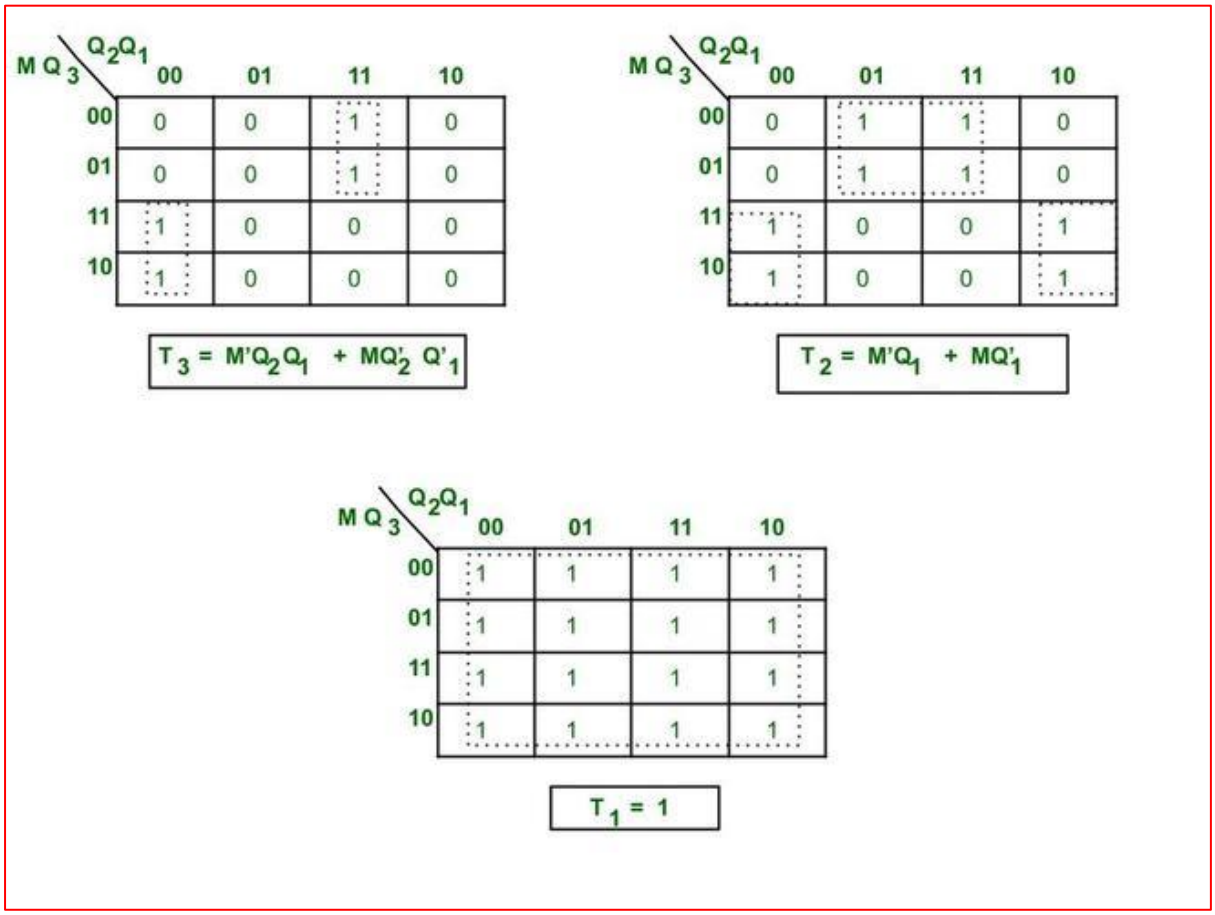
K-Maps for the Inputs **T0**, **T1** and **T2**: